NORTHERN LEISURE

Northern Sauna WI-FI and Heater Connection **INSTRUCTIONS**

WI-FI TIMER INSTRUCTIONS:

1. Install a minimum #8 AWG copper, 90°C rated feed from the power source to the heater terminal block.
2. The heater requires a 240V single-phase feed; a neutral wire is not needed.
3. Install cable or conduit from the heater to the WI-FI timer.
4. Install a minimum of 3x #12 AWG, 90°C rated conductors from the heater to the WI-FI timer. The WI-FI timer must be installed within 1.5 meters of the heater.
5. Inside the heater, locate the wire running from the disconnect to the thermostat, Disconnect this wire from the thermostat.
6. Inside the heater, locate the wire running from the mechanical timer to A1 of the contactor, Disconnect this wire from the Mechanical timer.
7. Connect the wire from the disconnect to the mechanical timer, and connect the wire removed from A1 of the contactor to the thermostat. This configuration allows the thermostat to cut power when the desired temperature is reached, after the timer has done its function.
8. Connect L1 from the WI-FI timer by splicing it to the wire going from the disconnect to the mechanical timer.
9. Install a jumper wire from L1 to NO1 inside the WI-FI timer.
10. Connect N (L2) on the WI-FI timer by splicing it to the white wire connected from the disconnect to A2 on the contactor.
11. Connect COM1 on the WI-FI timer by splicing it to the wire running from the mechanical timer to the thermostat.
12. Prior to powering on the unit, an electrician must verify no continuity between L1 and N inside the WI-FI timer with the timer, thermostat, and disconnect in the closed positions.

ALWAYS HIRE A LICENSED ELECTRICAL CONTRACTOR(S) AND FOLLOW YOUR LOCAL ELECTRCAL SAFETY CODES.

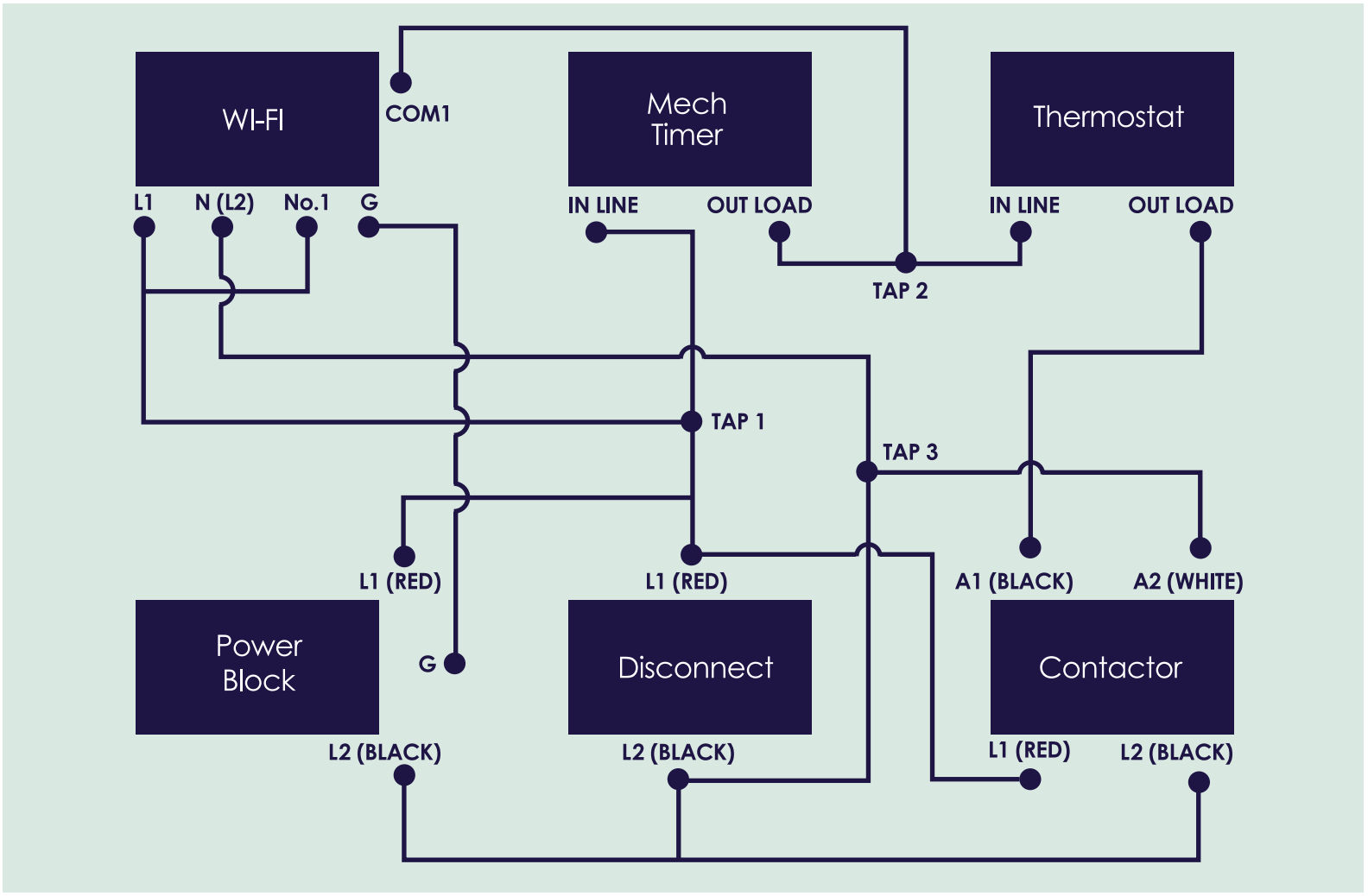

Safety Section

WARNING

Risk of Fire or Electrical Shock
- This smart box should be installed by a licensed electrician. Turn power off at main panel before servicing this switch or the equipment it controls.
- Disconnect power at the circuit breaker(s) or disconnect switch(es) before installing or servicing.
- Installation and/or wiring must be in accordance with national and local electrical code requirements.
- This enclosure does not provide grounding between conduit connections. When metallic conduit is used, you must also install grounding type bushings and jumper wire.
- Use #14- #8 AWG wires, rated at least 75°C (167°F)-COPPER conductors ONLY.
- Make sure there is no wire insulation under the terminal plate on the timer switch connector. Firmly tighten terminal screws.
- Do not remove the insulator that is covering terminals.
- KEEP THE DOOR CLOSED AT ALL TIMES when not servicing.
- Installation, Operating and Safety Instructions - Instructions for installation and use of this product are provided by the manufacturer. "Make sure to use this product together with 40A circuit breaker in the upstream" stated in the manual

Specifications

Input
120- 240/277VAC, 60Hz Detects voltage automatically (NO DIP SWITCH SETTING REQUIRED)

Contact Ratings
- 40A Resistive 120 to 277 VAC;
- 30A General Purpose 120 to 277 VAC;
- 20A Resistive, 30VDC;
- 1HP, 120 VAC;
- 2HP, 240VAC;
- 20A Ballasted load 120 to 277 VAC;
- 15A Tungsten, 120 VAC;
- 5A Tungsten, 250VAC;
- 800VA, Pilot Duty, 120VAC;
- 720VA, Pilot Duty, 240 VAC;
- TV-5, 120VAC

System
- Wireless Type: 2.4GHz Only IEEE 802.11 b/g/n
- Wi-Fi Range: 80Ft (Free Area)
- APP: Smart life
- IOS: 8.0 or higher
  Android: 4.1 or higher

Terminal range
- #14-#8 AWG

Operating temperature:
- -40°F to 149°F

Product Illustration

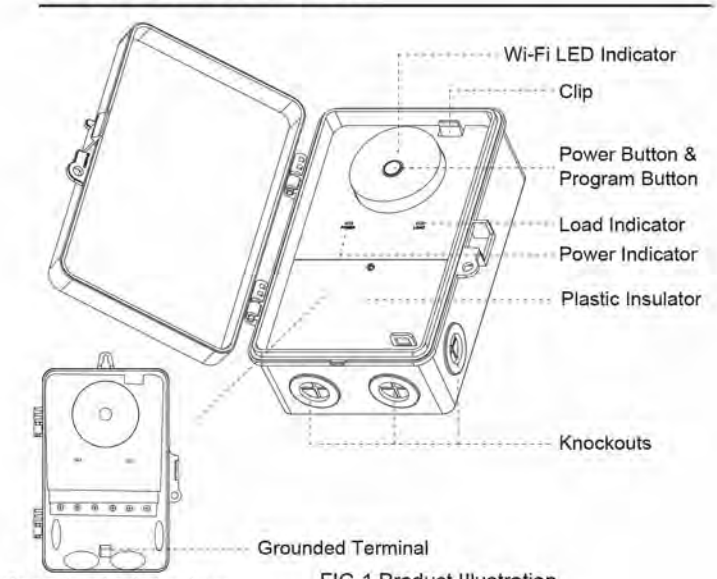

FIG.1 Product Illustration

Light Chart

Name	Color	Status	Status
Power Indicator	Red	Solid	Input normal
		No Light	Input abnormal
Load Indicator	Blue	Solid	Power is on
		No Light	Power is off
Wi-Fi LED Indicator	Blue	Blinks rapidly	Resetting/Enter into network configuration
		Blinks slowly until off	Configuration is success

Mounting the Smart Box Timer

1. Choose the knockouts

For 1/2" Knockouts: a. Place small-blade screwdriver into inner ring of knockout circle .
b. Tap down lightly with the screwdriver to punch the 1/2in. knockout loose. (FIG.2).

For 3/4" Knockouts: 1. Create 1/2in. knockouts as instructed.
2. Grip outer ring of knockout circle with pliers.
3. Gently twist and pull to remove outer ring and form 3/4in. knockout.

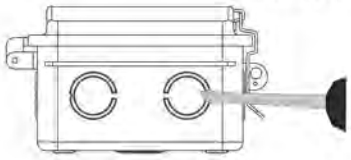

FIG.2 1/2" knockout



FIG.3 3/4" knockout

2. Mounting the Digital Box Timer
   a. Hold the box in place and use the three holes (FIG.4) to mark position on the mounting surface.
   b. Mount the box with the screws

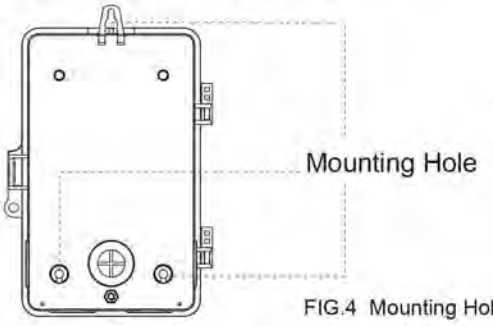

FIG.4 Mounting Holes

NOTE

- Before installation, please confirm the Wi-Fi signal is strong enough.
- Wi-Fi range can be affected by obstructions, metal objects, distance and weather. Mount unit should be as close to the router as possible.
- Install upright, in a vertical orientation.
- Always close the rainproof door after use.

Connecting the Wires

1. Lift the plastic insulator off the retaining post to expose the terminal strip.
2. According to the wiring diagram (TYPICAL APPLICATION WIRING DIAGRAMS) to wire.

Note: please connect the grounded wire to the grounding terminal.

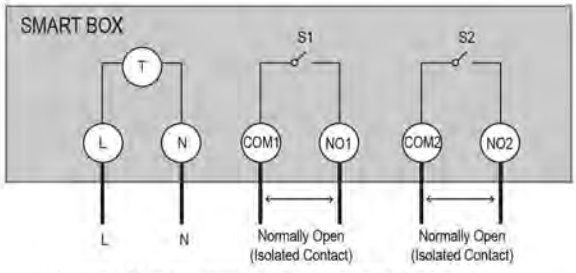

L = Live | N = Neutral | NO = Normally Open |
COM = Common Terminal | J = Jumper Wire | T = Timer

FIG.5 TERMINAL DESIGNATIONS

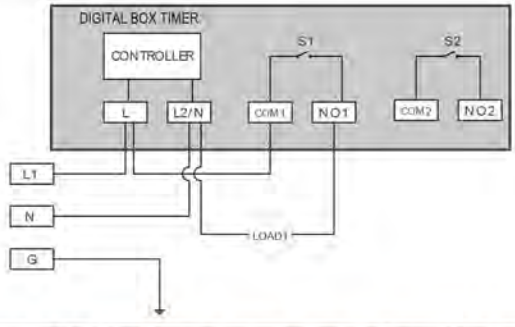

FIG6. ***120V Application-*** Controlling One 120VAC Load

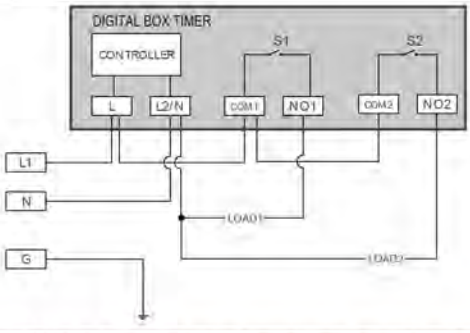

FIG7. ***120VAC Application*** - Controlling Two 120VAC Loads

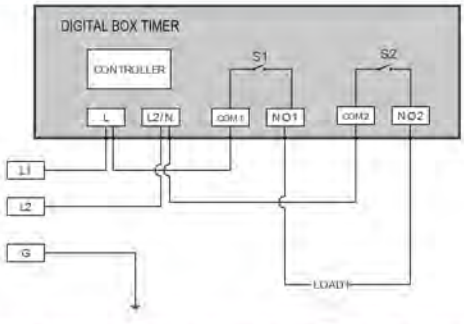

FIG8. ***240VAC Application-*** Controlling One 240VAC Load

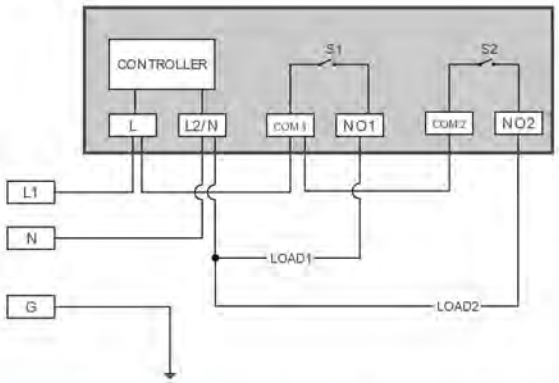

FIG9. ***277VAC Application-*** Controlling Two 277VAC Loads

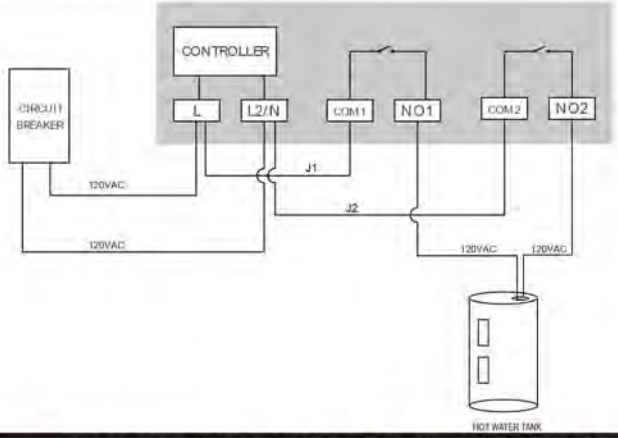

FIG10. HOT WATER HEATER TYPICAL WIRING DIAGRAM

Smart Life APP Setup

NOTE

Due to continuous updates and improvements, the "Smart Life" app user interfaces may appear slightly different. In case of any differences, follow the in-app instructions.

Note: Turn on Bluetooth on your phone, Bluetooth is an auxiliary way for devices to connect to WiFi, helping you to connect the smart box to WiFi networks more easily.

1. Download the Smart Life APP
   Scan QR Code or search "Smart Life" in Google Play or the App Store to download and install the app.



FIG.11 Download the APP

2. Open the "Smart Life" app. Tap "Register" to create a new account or Log In to log your account



FIG.12

Note: Turn on Bluetooth on your phone.
(Just need bluetooth during connection)

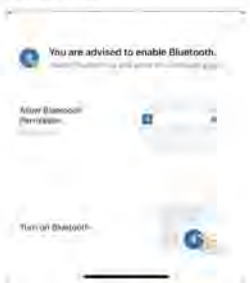

3. Long press the program button on the smart box until the blue light fast flash.

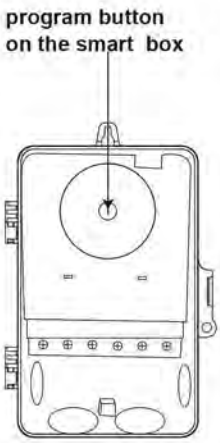

FIG.13

4. The app will detect your smart box automatically. Then tap the "add" button. (Or tap the top right corner "+",figure 15 shows)



FIG.14



FIG.15

5. Select 2.4GHz Wi-Fi network and enter a password, then tap the “NEXT” button.



FIG.16

6. Tap the”+” on the right corner.
Your timer is connecting to the network..



FIG.17



FIG.18

Turning Devices On/Off

To turn the smart box ON/OFF, 2 methods:
A. Press the power button on the smart box
B. Tap ON/OFF in the Smart Life APP.

Timer Function

Enter the Smart Box control interface, select the“Schedule”, ”Countdown”, ”Random”, "Circuit" or “Astronomical” to meet your needs.

Countdown

Tap "Countdown" to set the hours and minutes, and then tap the "Start" button. The Smart Box will maintain the current state (on or off) until the end of the countdown.It will terminate countdown mode automatically if you turn on/off the smart box.



Schedule

Set the Start/End time in a 7-day period with a 1-minute interval according to your needs. Every program you set repeats weekly.



Circulate

Set the duration of each ON and OFF, the start and end time according to your needs. The ON/OFF schedule will repeat between the start and end time. For example: You set a period from 6:00 AM to 09:00AM on Mon, Thur and Fri, turn on your pump for 5 mins, and off for 10 mins. The Smart Box will repeat on/off from 6:00 AM to 09:00AM.



Random

Either +/-30 minutes during setting ON/OFF time, randomly control device when you are away from home.The setting process is the same as "Schedule".



Date: 2024-01-23

Shenzhen Dioo Sauna Equipment Co., Ltd.
No.66 Baotong Nanlu,
Xikeng Shequ,
Longgang Dist.,
Shenzhen,
518115 Guangdong
P.R. China

Ref: CU US + Canada Certificate

Type of Equipment	:	Sauna Heater
Certificate No.	:	CU 72303521 0001
Report No.	:	CN23Q41Y 001
Engineer/Contact	:	James Chen
Standards	:	UL 875:2009 R1.21 CAN/CSA-C22.2 NO. 60335-1:16 (R2021) CAN/CSA-E60335-2-53:05 (R2023)

Dear Madame or Sir,

The above referenced technical equipment has been tested and was found to be in compliance with the listed test requirement(s). Enclosed, please find the TUV Rheinland approval document No. CU 72303521 0001.
It authorizes you to label the listed product(s) with the TUV Rheinland Mark identified in the approval document. For compliance, the Test Mark must be on the approved unit.

Your product is subject to regular factory follow-up inspections as well as annual certificate and factory registration fees.

In using the TUV Rheinland Mark you are obligated to comply with the TUV Rheinland of North America Service Agreement.

If we can be of any further assistance to you, please do not hesitate to contact us.

With kind regards,

Certification Body



Y. Cao

Enclosure

Certificate

Certificate no. CU 72303521 0001

License Holder:

Shenzhen Dioo Sauna Equipment Co., Ltd.
No.66 Baotong Nanlu,
Xikeng Shequ,
Longgang Dist.,
Shenzhen,
518115 Guangdong
P.R. China

Manufacturing Plant:

Shenzhen Dioo Sauna Equipment Co., Ltd.
No.66 Baotong Nanlu,
Xikeng Shequ,
Longgang Dist.,
Shenzhen,
518115 Guangdong
P.R. China

Report Number: CN23Q41Y 001
Client Reference: Betty Zhang

Certification acc. to: UL 875:2009 R1.21
CAN/CSA-C22.2 NO. 60335-1:16 (R2021)
CAN/CSA-E60335-2-53:05 (R2023)

Product Information

Certified Product: Sauna Heater

Model Designation: SAF-60N, SAF-90N, SAF-120

Technical Data: 240V, 60Hz, Class I, IPX4
SAF-60N: 6000W;
SAF-90N: 9000W;
SAF-120: 12000W

Remarks:

Appendix: 1

Date of issue: 2024-01-23
(yr/mo/day)

TÜVRheinland
C US

® TÜV, TUEV and TUV are registered trademarks . Utilisatio n and application requires prior approval.

TUV Rheinland of North America, Inc.
400 Beaver Brook Rd, Boxborough, MA 01719
Tel +1 (978) 266 9500, Fax +1 (978) 266-9992